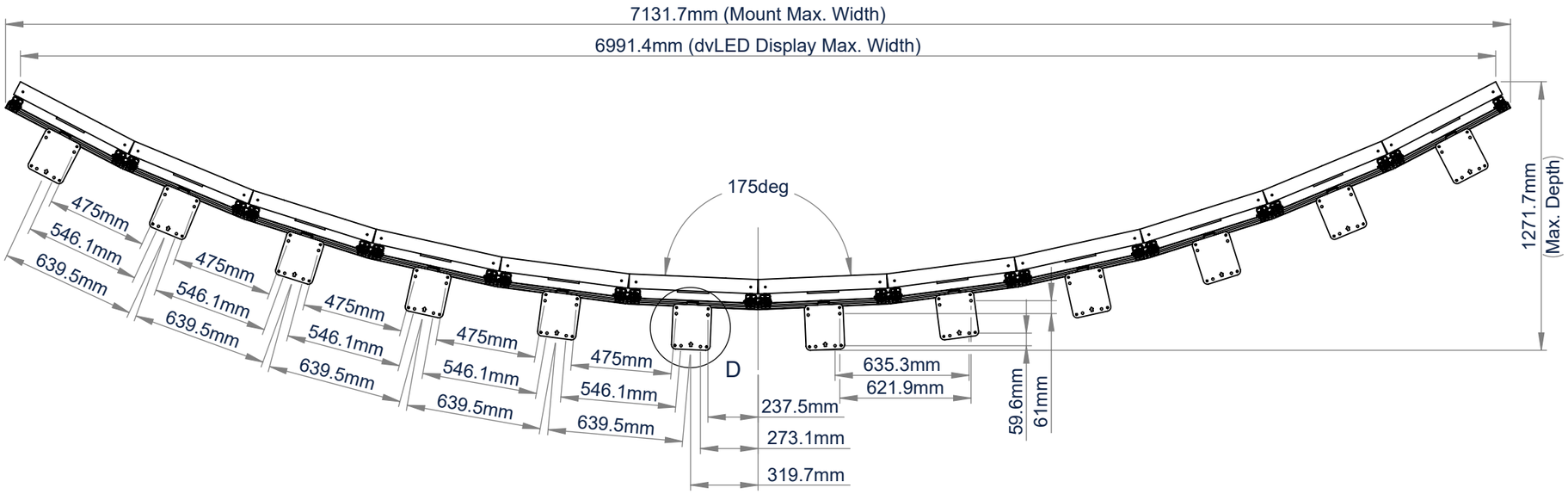
7131.7mm (Mount Max. Width)
6991.4mm (dvLED Display Max. Width)
175deg
475mm
546.1mm
639.5mm
D
237.5mm
273.1mm
319.7mm
635.3mm
621.9mm
59.6mm
61mm
1271.7mm
(Max. Depth)

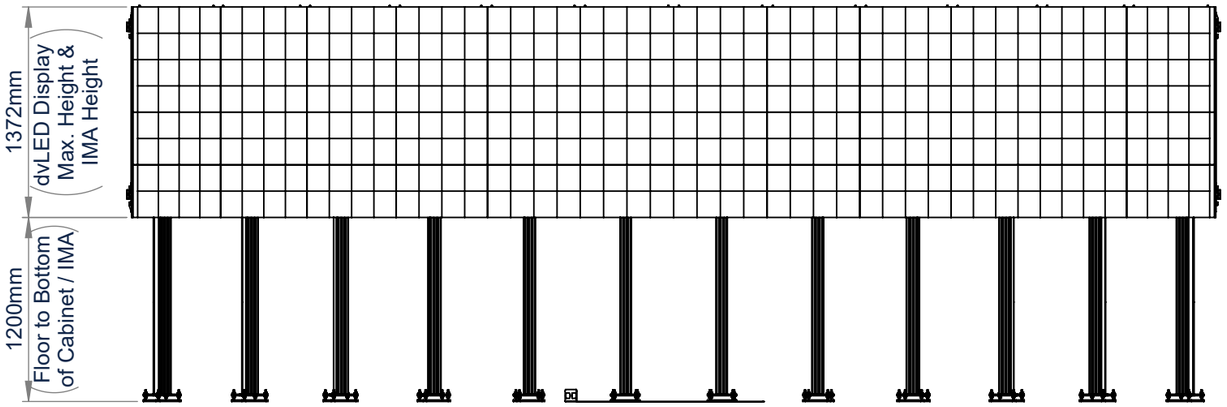
1372mm
dvLED Display
Max. Height &
IMA Height
1200mm
Floor to Bottom
of Cabinet / IMA